DS-2CE78U7T-IT3F
8 MP Ultra-Low Light Camera

Key Feature

- 8.29 MP, 3840 × 2160 resolution
- Ultra-low light
- 130 dB true WDR, 3D DNR
- 2.8 mm, 3.6 mm, 6 mm, 8 mm, 12 mm fixed lens
- Smart IR, up to 60 m IR distance
- 4 in 1 video output (switchable TVI/AHD/CVI/CVBS)
- IP67

Specification

Camera	
Image Sensor	8.29 MP CMOS
Signal System	PAL/NTSC
Frame Rate	TVI: 8MP@12.5fps, 8MP@15fps, 5MP@20fps, 4MP@25fps, 4MP@30fps, 1080P@25fps, 1080P@30fps AHD: 8MP@12.5fps, 8MP@15fps CVI: 8MP@12.5fps, 8MP@15fps CVBS: P/N
Resolution	3840 (H) × 2160 (V)
Min. Illumination	0.003 Lux@(F1.2, AGC ON), 0 Lux with IR
Shutter Time	PAL: 1/12.5 s to 1/50,000 s NTSC: 1/15 s to 1/50,000 s
Lens	2.8 mm, 3.6 mm, 6 mm, 8 mm, 12 mm fixed lens
Horizontal Field of View	102° (2.8 mm), 79° (3.6 mm), 51° (6 mm), 38° (8 mm), 24° (12 mm)
Lens Mount	M16
Day & Night	ICR
WDR (Wide Dynamic Range)	≥130 dB
Angle Adjustment (Bracket)	Pan: 0° to 360°, Tilt:0° to 75°, Rotate: 0° to 360°
Menu	
Image Mode	STD/HIGH-SAT
AGC	Yes
Day/Night Mode	Auto/Color/BW (Black and White)
White Balance	Auto/Manual
AE (Auto Exposure) Mode	Global/BLC/HLC/WDR
Noise Reduction	3D DNR
Language	English
Functions	Brightness, Sharpness, Mirror, Smart IR
Interface	
Video Output	Switchable TVI/AHD/CVI/CVBS
General	
Operating Conditions	-40 °C to 60 °C (-40 °F to 140 °F), humidity: 90% or less (non-condensing)
Power Supply	12 VDC ± 25% **You are recommended to use one power adapter to supply the power for one camera.*
Power Consumption	Max. 4.2 W
Protection Level	IP67
Material	Enclosure: Plastic Main body: Metal
IR Range	Up to 60 m
Communication	HIKVISION-C
Dimensions	Φ 109.82 mm × 91.03 mm (Φ 4.32" × 3.6")
Weight	Approx. 325 g (0.72 lb.)

Order Model

DS-2CE78U7T-IT3F

Dimension

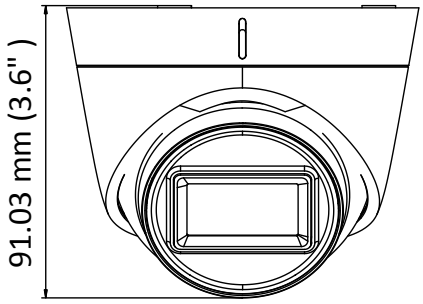

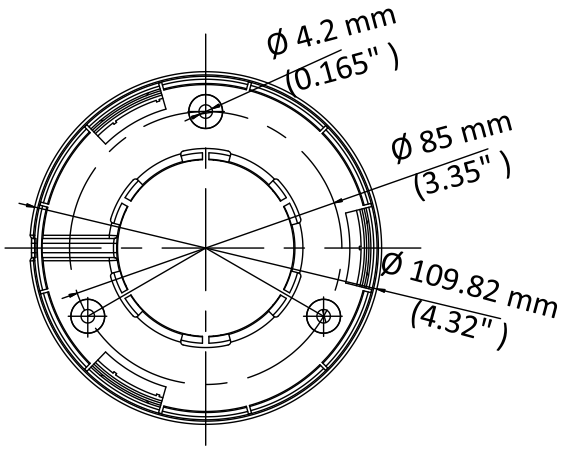

Accessory

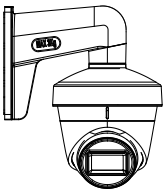

DS-1272ZJ-110-TRS
Wall Mount

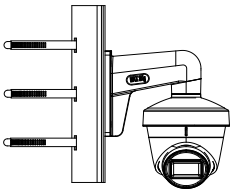

DS-1275ZJ-SUS
Vertical Pole Mount

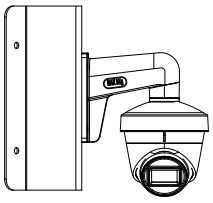

DS-1276ZJ-SUS
Corner Mount

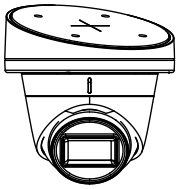

DS-1281ZJ-S
Inclined Ceiling Mount

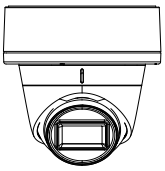

DS-1280ZJ-S
Junction Box

Distributed by

Headquarters
No.555 Qianmo Road, Binjiang District,
Hangzhou 310051, China
T +86-571-8807-5998
overseasbusiness@hikvision.com

Hikvision USA
T +1-909-895-0400
sales.usa@hikvision.com

Hikvision Europe
T +31-23-55-42-770
info.eu@hikvision.com

Hikvision Middle East
T +971-4-8816086
salesme@hikvision.com

Hikvision Russia
T +7-495-669-67-99
saleru@hikvision.com

Hikvision India
T +91-22-28469900
sales@pramahikvision.com

Hikvision Italy
T +39-0438-6902
info.it@hikvision.com

Hikvision France
T +33(0)1-85-330-450
info.fr@hikvision.com

Hikvision Spain
T +34-91-737-16-55
info.es@hikvision.com

Hikvision Poland
T +48-22-460-01-50
poland@hikvision.com

Hikvision UK
T +01628-902140
support.uk@hikvision.com

Hikvision Singapore
T +65-6684-4718
sg@hikvision.com

Hikvision Oceania
T +61-2-8599-4233
salesau@hikvision.com

Hikvision Canada
T +1-909-895-0400
sales.usa@hikvision.com

Hikvision Korea
T +82-31-731-8841
sales.korea@hikvision.com

Hikvision Brazil
T +55 11 3318-0050
Latam.support@hikvision.com

Hikvision Africa
T +27 (10) 0351172
sale.africa@hikvision.com

Hikvision Hong Kong
T +852-2151-1761

© Hikvision Digital Technology Co., Ltd. 2017 | Data subject to change without notice | 0100001081127